Specification
规格书

Customer Name: _____

客户名称

Customer P/N: _____

客户品号

Product P/N: GDY-3535VS850-1CC2-D5D7B

产品型号

Sending Date: _____

供货日期

☐ Technical Reference 技术参考			☐ Sample 样品		■ Mass Product 量产供货
Customer approval 客户审核			GM approval 光脉审核		
Approved 核准	Audit 确认	Confirmation 制作	Approved 核准	Audit 确认	Confirmation 制作
☐ Qualified 接受		☐ Disqualified 不接受	Date: 日期:		

SHENZHEN GUANGMAI ELECTRONICE CO., LTD.
地址（Add）：广东省深圳市宝安区燕罗街道广田路 96 号光脉科技园
地址（Add）： Guangmai Tech Park,No.96,Guangtian Rd,Yanluo,Baoan Dist,Shenzhen
电话(Tel):+86-18878641376 Email:gmkj06@gmleds.com 网址:www.gmleds.com Wechat: GMKJ-LED

Copyright © 2024 GMDZ . All rights reserved . Subject to change without notice

■ Features 产品特征：

- low voltage operation 低电压工作
- Instant light 瞬间点亮
- Long operating life 超长工作时间

■ Applications 产品应用：

- Smart home（智能家居）
- Iris/face recognition（虹膜/人脸辨识 ）
- biomedical（生物医疗 ）
- Infrared communication（红外光通信）
- Infrared monitor, infrared therapy（红外监控器，红外治疗仪）

Copyright © 2024 GMDZ . All rights reserved . Subject to change without notice

■ Package Dimensions 封装外形尺寸

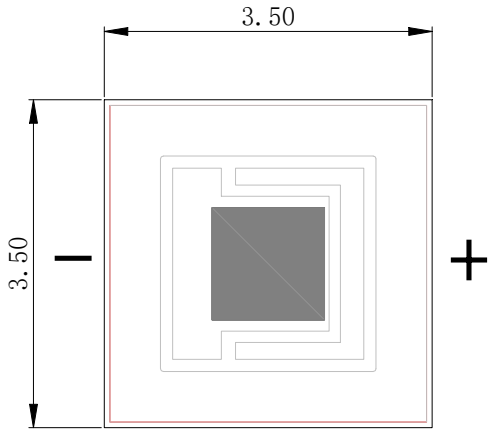

Top View

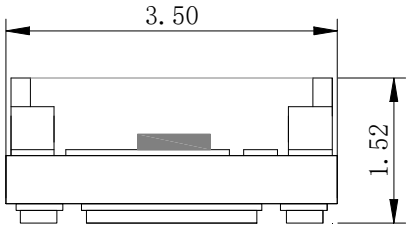

Side View

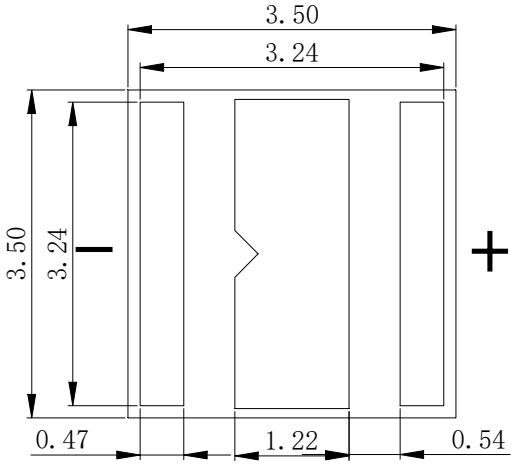

Bottom View

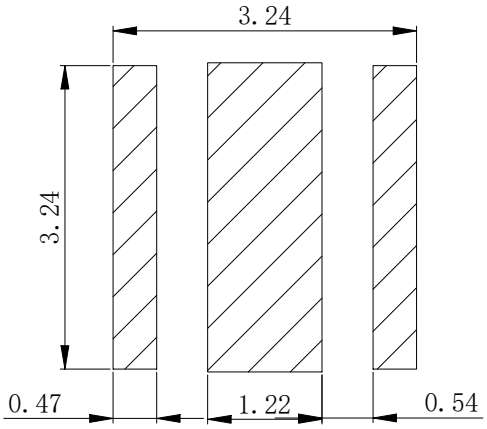

Recommended pad

Notes: All dimensions in mm tolerance is ±0.1mm unless otherwise noted.
除非另有说明，以上尺寸以 mm 为单位，公差在±0.1mm。

Copyright © 2024 GMDZ . All rights reserved . Subject to change without notice

■ Absolute Maximum Ratings(At TA =25℃) 极限参数

Parameter	Symbol	Rating	Unit
DC Forward Current (正向电流)	I_F	3500	m A
Peak pulse Current* (脉冲电流)	I_{FP}	4000	m A
Power Dissipation (功率)	P_D	7.7	W
Operating Temperature Range (工作温度)	T_{OPR}	-40 ~ +85	°C
Storage Temperature Range (储存温度)	T_{STG}	-40 ~ +100	°C

Note: 备注

1. 1/10 Duty cycle, 0.1ms pulse width. 脉宽 0.1ms,周期 1/10。
2. Care is to be taken that power dissipation does not exceed the absolute maximum rating of the product. 使用功率不能超过规定的最大值。
3.When the LEDs are in operation the maximum current should be decided after measuring the package temperature, junction temperature should not exceed the maximum rate. LED 使用最大电流需根据散热条件确定，结温不能超过最大值。

Copyright © 2024 GMDZ . All rights reserved . Subject to change without notice

■ Electrical/Optical Characteristics- (At T_A=50°C) 光电特性参数

Parameter	Symbol	Conditions	Min	Avg.	Max	Units
Forward Voltage （正向压降）	V_F	I_F=3500mA	1.8	2.0	2.2	V
Threshold Current (阈值电流)	I_{th}	--	300	500	700	mA
Radiant Flux （光功率）	Φe	I_F=3500mA	2700	3000	3500	mW
Peak wavelength （峰值波长）	λp	I_F=3500mA	842	850	858	nm
Viewing Angle [1] （发光角度）	$2\Theta_{1/2}$	I_F=3500mA	--	20	--	Deg
Thermal Resistance Junction To Board （热阻）	$R\Theta_{J-B}$	I_F=3500mA	--	1	--	°C/W

Note:(备注）

1. The above forward voltage measurement allowance tolerance is ±0.1V。
以上所示电压测量误差±0.1V
2. The above luminous intensity measurement allowance tolerance ±5%.。
上述发光强度的测试允许公差为±5%
3. The wavelength measurement error shown above is plus or minus 1nm。
以上所示波长测试允许公差为±1。
4.2q1/2 is the angle from optical centerline where the luminous intensity is 1/2 the optical centerline value。
2q1/2 是半值角,指光强是光学中心线光强的 1/2 处到光学中心线的角度。

Copyright © 2024 GMDZ . All rights reserved . Subject to change without notice

■ Typical Optical/Electrical Characteristics Curves 典型光电参数曲线

(Ta=50℃ Unless Otherwise Noted)

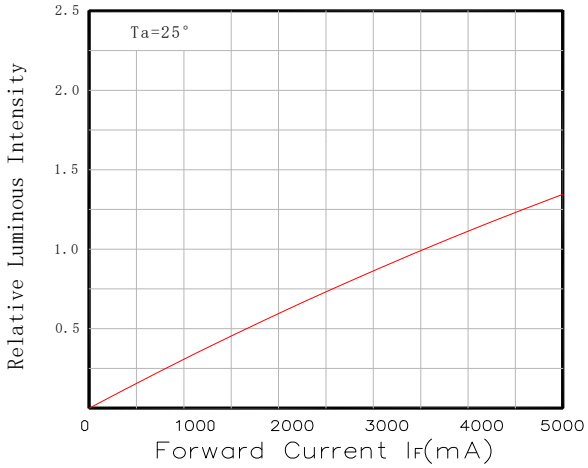

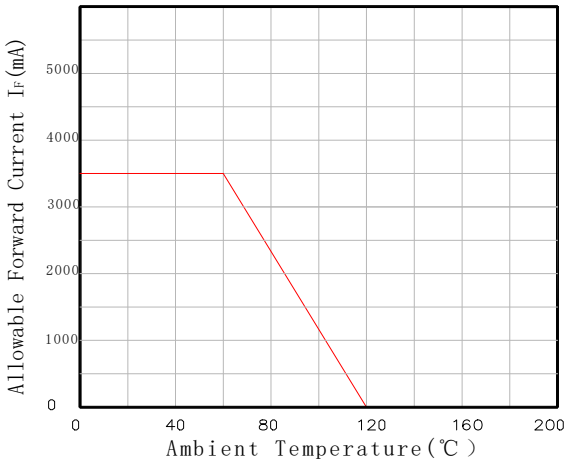

IF - VF

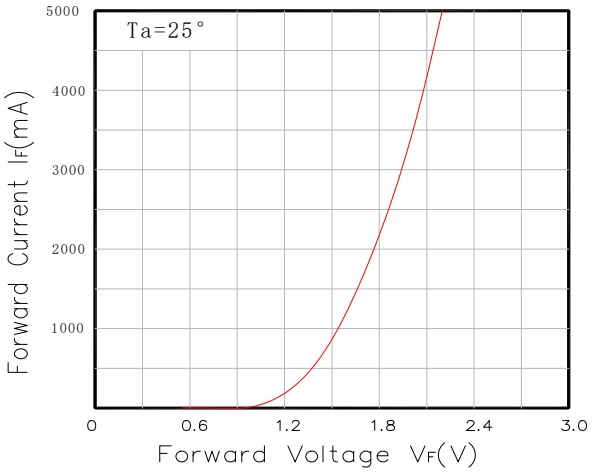

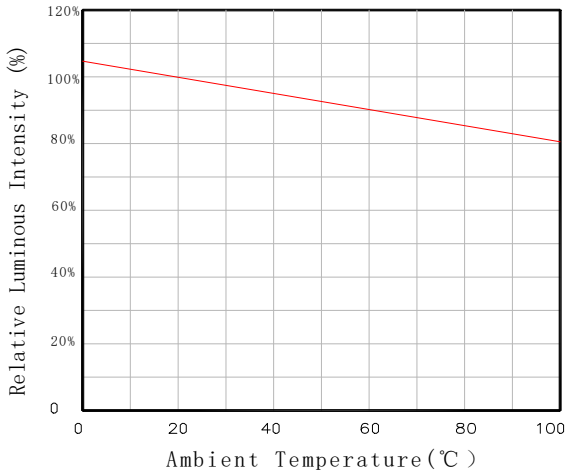

Wavelength Characteristics

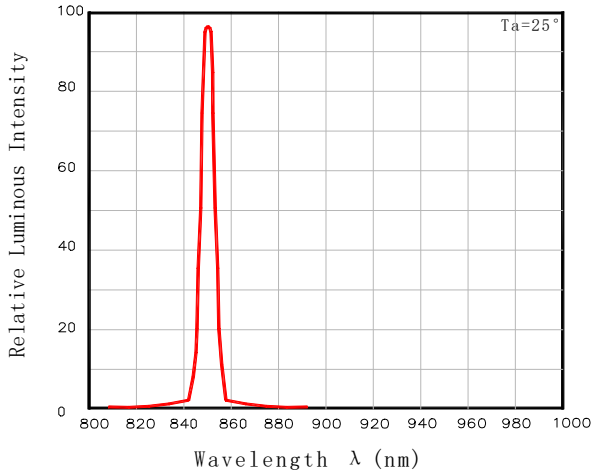

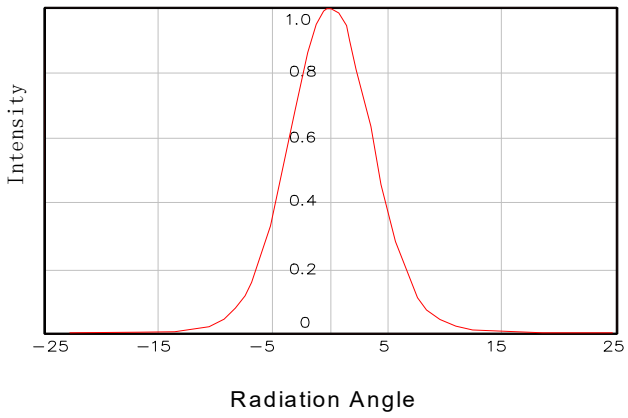

Copyright © 2024 GMDZ . All rights reserved . Subject to change without notice

■Reliability test standards 可靠性实验标准

测试项目 Test Item	参考标准 REF. Standard	测试条件 Test condition	持续时间 Duration	取样数 Sample count	损坏数量 Number of Damaged
温度循环 Temperature Cycle	JESD22-A104-A	100℃±5 30min~25℃ 30min,5min,30min,5min	循环 100 次 100 cycles	22	0
冷热冲击 Thermal shock	JESD22-A106	-40℃~100℃ 30min, 30min	循环 100 次 100 cycles	22	0
高温储存 High Temperature Storage	JEITA ED-4701 200 201	TA=100℃±5℃	1000 Hrs	22	0
低温储存 Low Temperature Storage	JEITA ED-4701 200 202	TA=-40℃±5℃	1000 Hrs	22	0
高温/高湿储存 Humidity Heat Storage	JIS C 7021 (1977)B-11	Ta=60℃ RH=85%	1000Hrs	22	0
寿命测试 Life test	JESD22-A108-A	Ta=25℃ If=3500mA	1000Hrs	22	0
高温/高湿寿命测试 High humidity Heat life test	JESD22-A101	Ta=60℃ RH=85% IF=3500mA	1000Hrs	22	0

Criteria For Judging Damage 失效判定标准：

Test Item 项目	Symbol 符号	Test condition 测试条件	Criteria For Judgement 判定标准	
			Min. 最小	Max. 最大
Forward Voltage 正向电压	VF	IF=3500mA	--	U.S.L*)1.1
Reverse Current 反向电流	IR	VR=5V	--	10uA
Luminous Flux 光通量	Lm	IF=3500mA	L.S.L*)0.7	--
Lamp bead lighting test 灯珠点亮测试	/	IF=3500mA	无开路、短路、闪变	

U.S.L：Upper standard level 规格上限　　L.S.L：Lower standard level 规格上限

Note 备注：

The above technical data is only the typical value of the product, not as any application conditions and application mode guarantee.以上技术数据仅为产品的典型值，不作为任何应用条件及应用方式的保证。

Copyright © 2024 GMDZ . All rights reserved . Subject to change without notice

■SMT ReflowSoldering Instructions SMT 回流焊说明

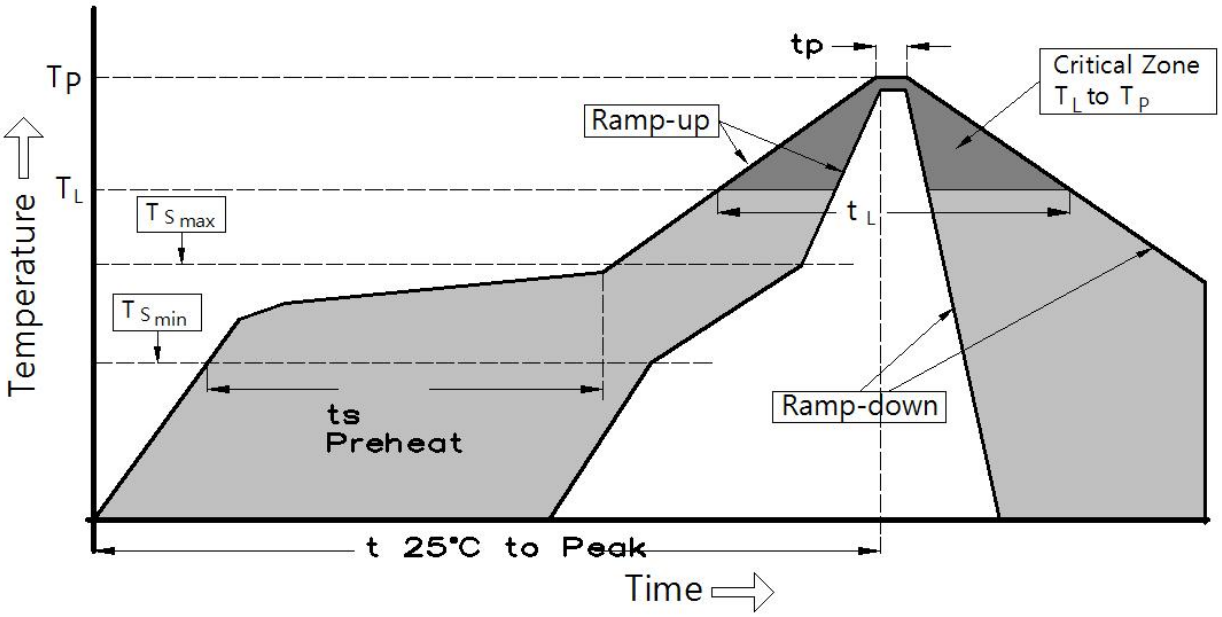

平均升温速度（Tsmax 至 Tp）	最高 3 ° C/秒
预热：最低温度 (Tsmin）	100 ° C
预热：最高温度 (Tsmax）	150 ° C
预热：时间（tsmin 至 tsmax）	60 - 120 秒
限时维持高温：温度 (TL)	185 ° C
限时维持高温：时间 （tL）	最多 60 秒
峰值 / 分类温度 (Tp)	240° C
限时峰值分类温度:时间（tp）	最多 10 秒
与实际峰值温度 (tp) 低 5 ° C 以内的保持时间	最多 30 秒
降温速度	最高 6 ° C/ 秒
25 ° C 升至峰值温度所需时间	最多 8 分钟

●Notes for reflow [if reflow products are needed]回流焊注意事项[如需回流焊产品]

1.Reflow soldering should not be done more than two times. In the case of more than 24 hours passed soldering after first, LEDs will be damaged. 回流焊次数不可以超两次，两次回流焊时间间隔如果超过 24 小时，LED 可能由于吸湿而损坏

2.When welding, do not press hard on the surface of the lens when the material is heated.当焊接时，不要在材料受热时用力压透镜表面。

3.Scrape the heat-conducting solder paste on the aluminum base plate, stir the solder paste clockwise for 10-15 minutes before scraping the solder paste, and place the aluminum base plate on the solder paste scraping tool. Scrape the solder paste evenly and thickly

Copyright © 2024 GMDZ . All rights reserved . Subject to change without notice

板上刮导热锡膏,刮锡膏前锡膏要顺时针搅拌 10-15 分钟,把铝基板放在刮锡膏工装上，锡膏要刮的均匀，厚度要适宜。

4.Scrape solder paste steel mesh needs to be made into a cross, so as to allow air circulation, avoid solder paste lifting caused by LED poor heat dissipation 刮锡膏钢网需做成十字架，好让空气流通，避免锡膏抬起造成 LED 光源散热不良。

5.Note that the lamp should be installed flat and the two pins of the LED light source should be installed on the welding pad position of the aluminum substrate. 注意灯要装平，LED 光源的两个管脚要装在铝基板的焊盘位上。

6.Scrape the aluminum base plate of solder paste in 2 hours to install all the light source, light source installed in the aluminum base plate, the operator should self-check whether the light source is installed (can't have reverse, light source bottom suspension) to tilt 45 degrees Angle to check each light source 刮好锡膏的铝基板在 2 小时内要全部装好光源，光源的装在铝基板后，作业员要自检光源是否装好（不能有反向，光源底部悬空）要倾斜 45 度角检查每颗光源。

7.After reflow welding, check whether the light source is in the position of the welding pad, and do not have eccentric phenomenon, or the line will be broken in the second light distribution lens, resulting in open circuit.过完回流焊后要检查光源是否在焊盘位置上，不能有偏心现象，否则在上二次配光透镜时会把线拉断，造成开路。

8.Rapid cooling is not allowed after reflow soldering.回流焊后，不允许快速冷却。

9.Do not weld on deformed PCB.禁止焊接在变形 PCB 板上。

●SolderingIron 烙铁焊接

1.When hand soldering, keep the temperature of iron below less 300℃ less than 3 seconds.
当手工焊接时，烙铁的温度必须小于 300℃，时间不可超过 3 秒。

2.The hand solder should be done only one time.手工焊接只可焊接一次。

●Repairing 修补

Repair should not be done after the LEDs have been soldered. When repairing is unavoidable,a double-head soldering iron should be used (as below figure). It should be confirmed in advance whether the characteristics of LEDs will or will not be damaged by repairing.
LED 回流焊后不应该修复，当必须修复时，必须使用双头烙铁，而且事先应确认此种方式会不会损坏 LED 本身的特性。

●Cautions 注意事项

1.LED product is lens package, the surface is relatively brittle, pressing the lens surface will affect the LED reliability, so there should be preventive measures to avoid pressing the device, when using the nozzle, the pressure on the lens surface should be appropriate.LED 产品是透镜封装，表面较脆，用力按压透镜表面会影响 LED 可靠性，因此应有预防措施避免在按压器件，当使用吸嘴时，透镜表面的压力应是恰当的。

2.Components should not be mounted on warped (non coplanar) portion of PCB. After soldering, do not warp the circuit board.LED 灯珠不要焊接在弯曲的 PCB 板上，焊接之后，也不要弯折线路板。

3.Do not apply mechanical force or excess vibration during the cooling process to normal temperature after soldering. Do not rapidly cool device after soldering. 回流焊之后冷却过程中，不要对材料实加外力，也不要有震动，回流焊后，不要采用激剧冷却的方式。

Copyright © 2024 GMDZ . All rights reserved . Subject to change without notice

■ Packing Standard 包装标准

Normal packing quantity: 1000pcs/reel 正常包装数量：1000 片/卷

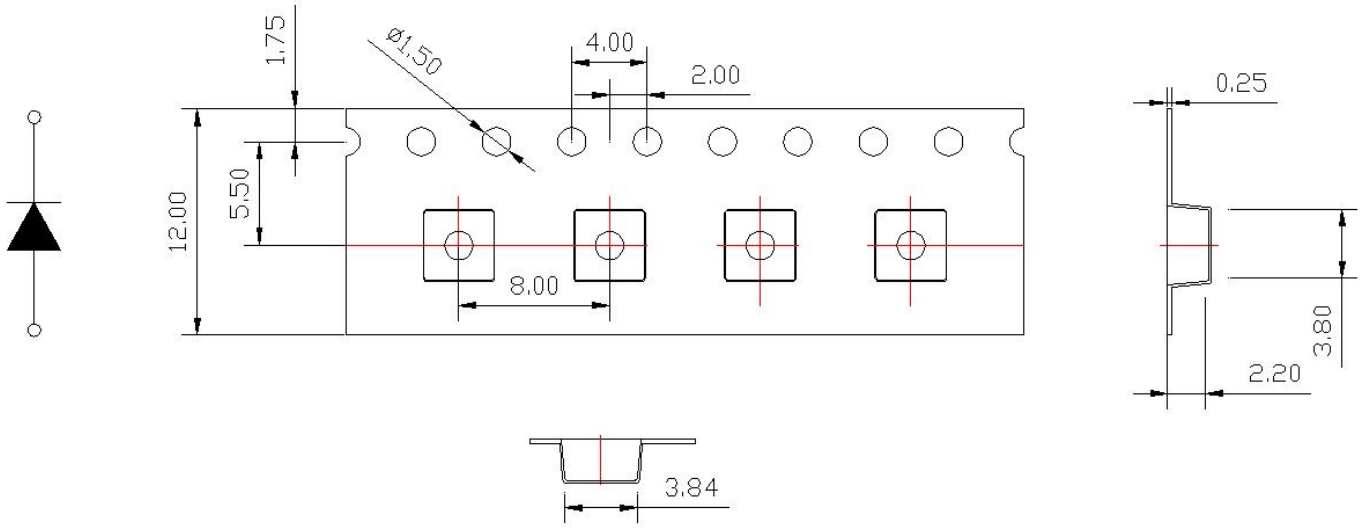

Reel Specifications 卷盘规格

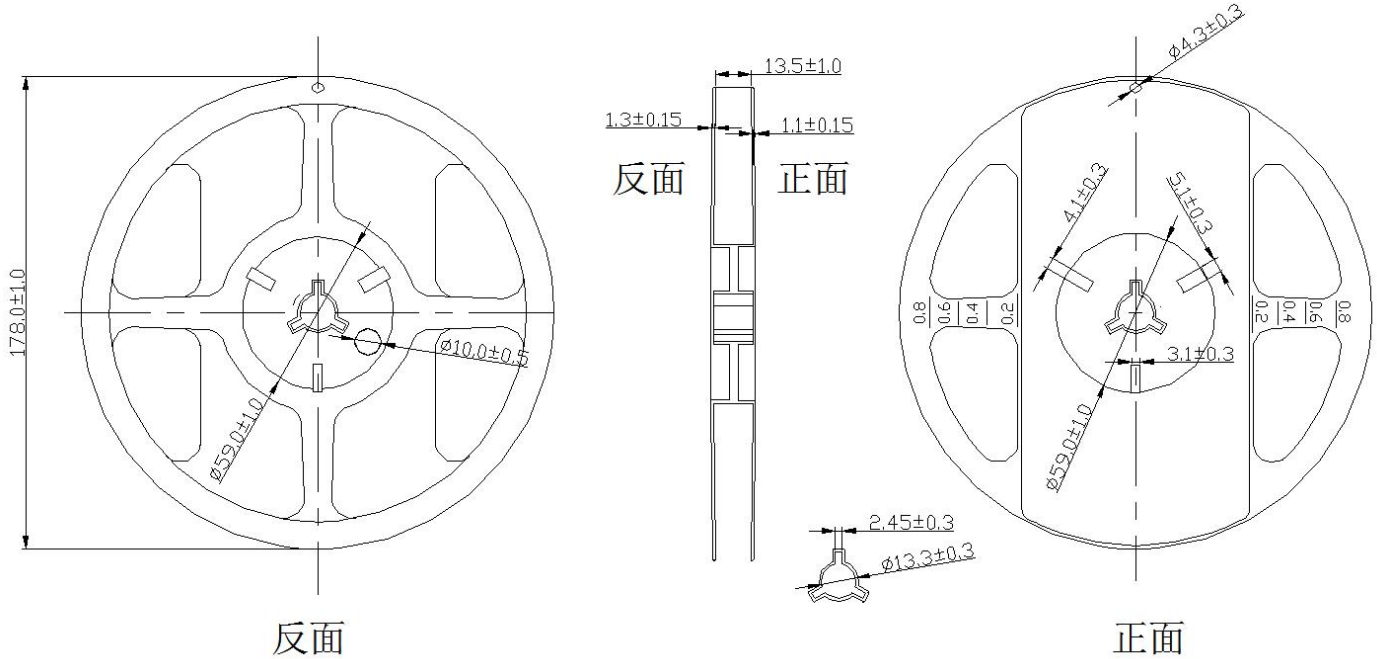

Copyright © 2024 GMDZ . All rights reserved . Subject to change without notice

Label 标签

IF（mA）:正向电流
VF（V）：正向电压
P（mW）：光功率
λp（nm）：峰值波长
PCS：数量

Moisture Resistant Packaging 防潮包装

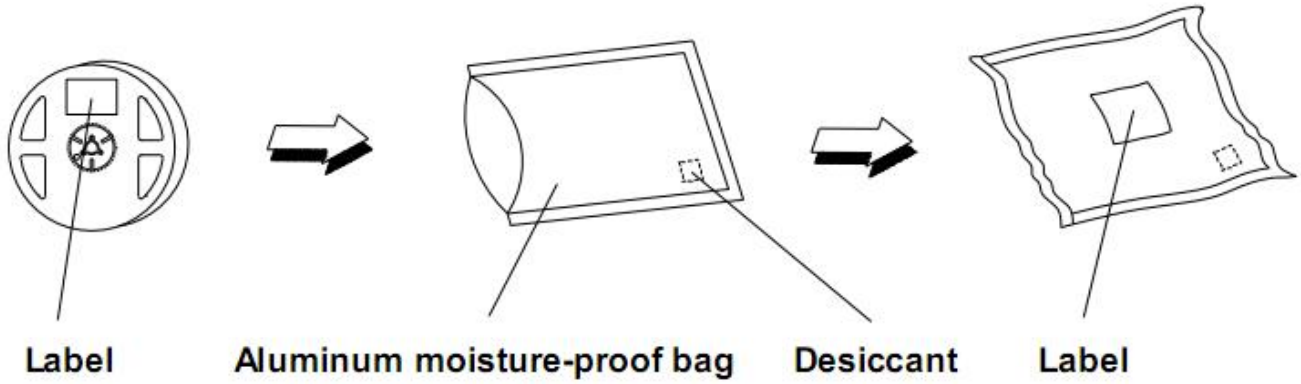

Copyright © 2024 GMDZ . All rights reserved . Subject to change without notice

■Product specification 产品使用说明

一、Storage/use 储存/使用：

1.In order to avoid moisture absorption, it is suggested to store the products in a drying cabinet with desiccant. The storage temperature is 5℃~30℃, and the humidity is ≤60%HR 为避免吸潮建议将产品贮存在放有干燥剂的干燥柜中，贮存温度为：5℃~30℃，湿度：≤60%HR。

2. After storage for six months, it is recommended to re-use the spectral separation to prevent changes in photoelectric parameters 储存六个月之后建议重新分光分色后使用，防止光电参数发生变化。

3.It is recommended to dry products that have been sealed and stored for more than six months before use. The drying condition is 65℃±5℃ for 10 hours 密封储存六个月以上的产品使用前，建议干燥，干燥条件为：65℃±5℃10 个小时。

4.The product shall be used within 24h after opening, otherwise it shall be baked at 65℃ for 4-6h before reflow welding 产品开封 24h 内需使用完毕，否则需 65℃ 烘烤 4-6h 后再过回流焊。

5. Do not press the lens surface with any sharp object (such as tweezers).Do not leave fingerprints on the surface of the lens.The positive normal pressure of the lens body should be less than 2 newtons, and The Times of press should be less than 3 times.The lateral pressure of the lens body is less than 1.5 newtons and the number of press is less than 3 times.Pick up materials correctly (as shown below)请勿以任何尖锐物体（例如镊子）按压透镜表面。请勿在透镜表面留下指印。透镜体正面法向承受按压力需小于 2 牛顿，按压次数小于 3 次；透镜体侧面承受按压力小于 1.5 牛顿，按压次数小于 3 次。

二、Products should not be in contact with water, oil or organic solutions。产品不得接触水、油、有机溶液。

三、The operating current value of the product should consider LED junction temperature 产品使用工作电流大小值应考虑 LED 结温。

四、Repackage unused products in moisture-proof bags and store in a dry place 重新包装未使用的产品置防潮袋密封好之后贮存在干燥的地方。

五、External dimensions are subject to change without prior notice 产品外观尺寸可更改而不另行通知。

六、Anti-static requirements: when using products, must wear anti-static ring or anti-static gloves, all equipment, devices, machines must be effectively grounded. This product belongs to electrostatic sensitive device, pay attention to anti-static protection!防静电要求：使用产品时，必须戴防静电环或防静电手套，所有设备、装置、机台必须有效接地。该产品属于静电敏感器件，注意做好防静电保护！

七、When LED working, push the temperature of PCB board should not exceed 60℃.当 LED 工作时，推存 PCB 板的温度不要超过 60℃。

八、Anti - vulcanization, chlorination, bromination and other treatments 防硫化、氯化、溴化等处理：In the closed, high temperature environment, the lamp may contain sulfur/chlorine/bromine and other substances, these sulfur, chlorine and bromine elements will volatilize into gas and corrosion LED light source. Because the LED seal silica gel has porous structure, and the light source silver plating reaction occurred. After curing reaction of LED light source, the functional area of the product will darken, the luminous flux will gradually decline until it becomes slightly bright, and the

Copyright © 2024 GMDZ . All rights reserved . Subject to change without notice

color temperature will drift obviously, and the LED light source will eventually fail. It is recommended to conduct sulfur emission test of lamps first to ensure that LED light source works in sulfur-free/chlorine/bromine and other material environment.在密闭、高温的环境中，灯具内可能含硫/氯/溴等物质，这些硫、氯和溴元素会挥发成气体并腐蚀 LED 光源。因为 LED 封密硅胶具有多孔性结构，与光源镀银层发生硫化反应。LED 光源出现硫化反应后，产品功能区会黑化，光通量会逐渐下降直至微亮，色温出现明显漂移，LED 光源最终会失效。建议先进行灯具排硫测试，确保 LED 光源在无硫/氯/溴等物质环境进行工作。

九、When the customer applies LED, it shall refer to the parameters of this specification and the requirements of operating environment. If the LED is used beyond the parameters or standard conditions without verification, our company will not make any quality guarantee。客户在应用 LED 时，需参考此规格书参数及使用环境要求，未经验证情况下超出参数或标准条件使用，我司不作任何品质担保。

Copyright © 2024 GMDZ . All rights reserved . Subject to change without notice